ALL DIMENSIONS IN MILLIMETERS

THIRD ANGLE PROJECTION
DO NOT SCALE DRAWING

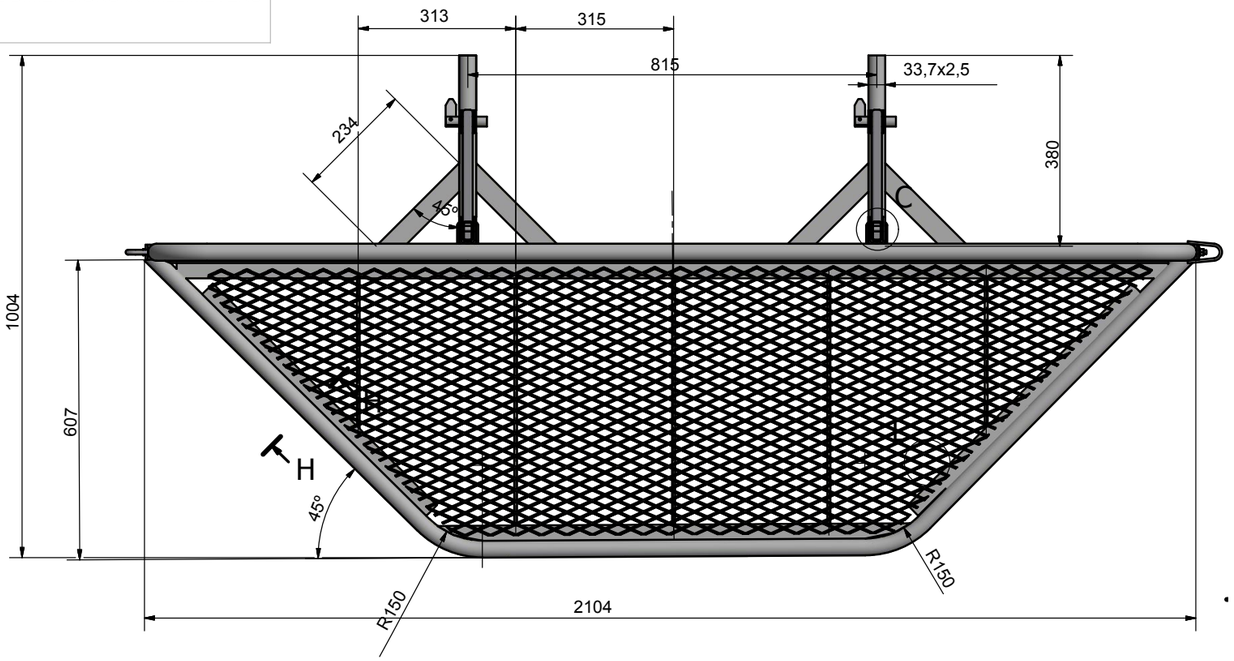

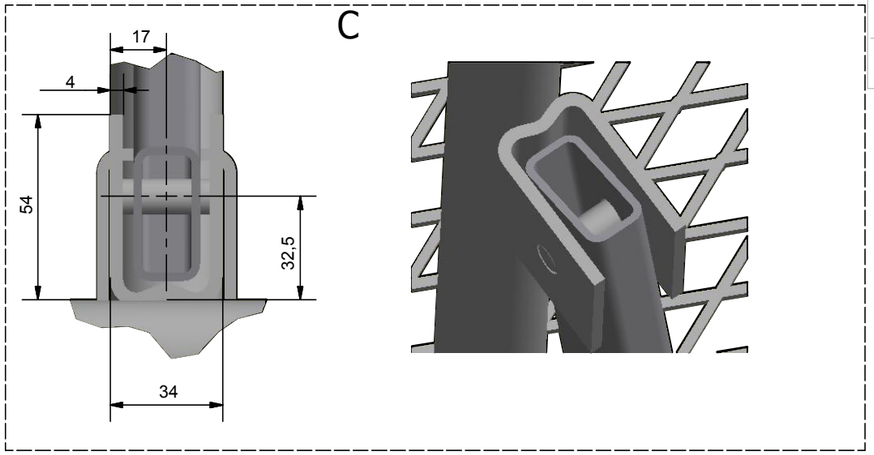

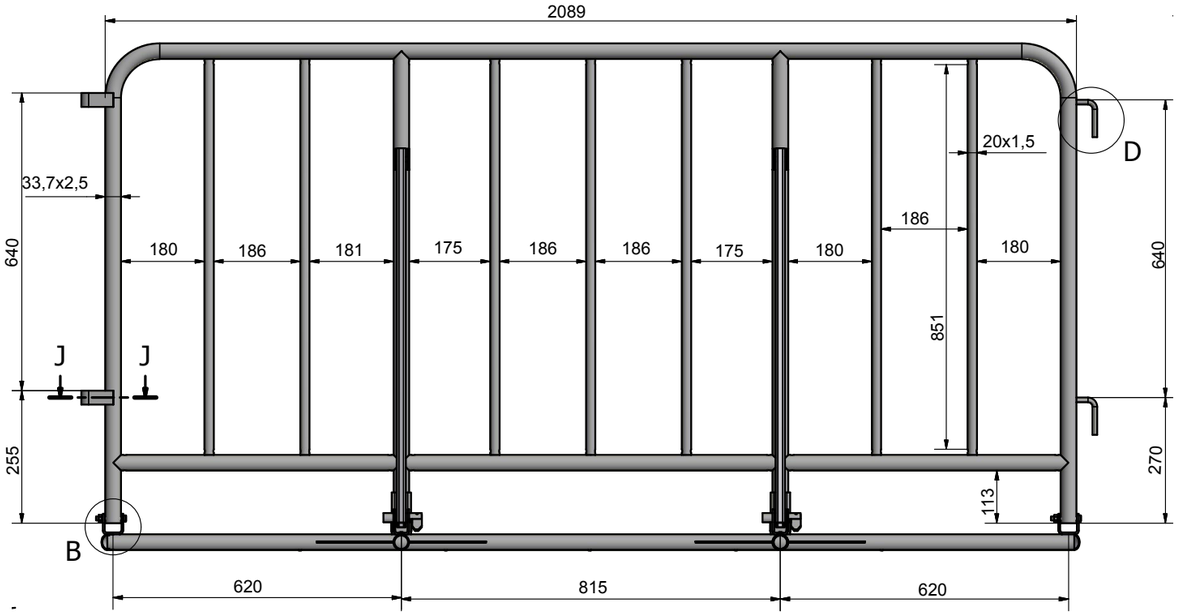

F (1 : 2)

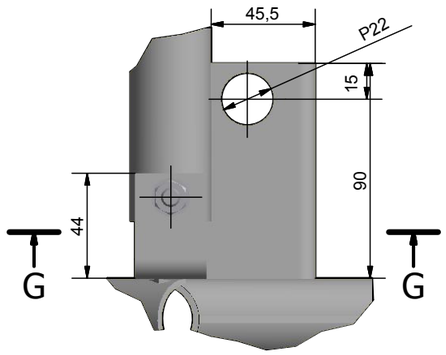

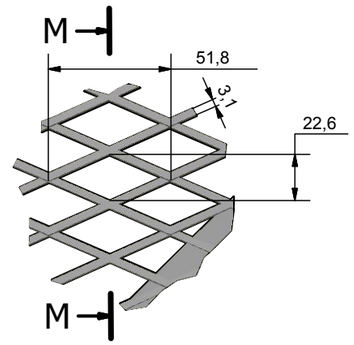

M-M (1:2)

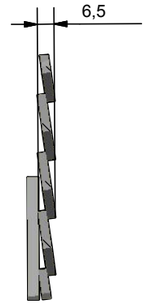

D (1 : 2)

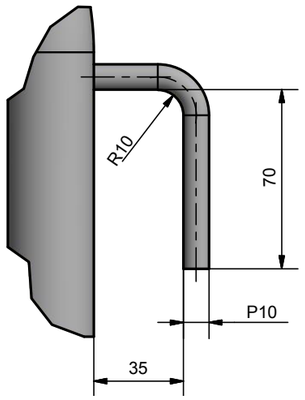

E-E (1:2)

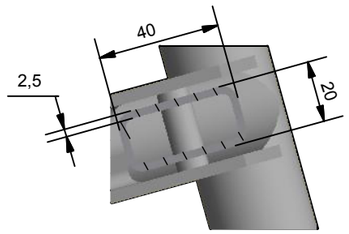

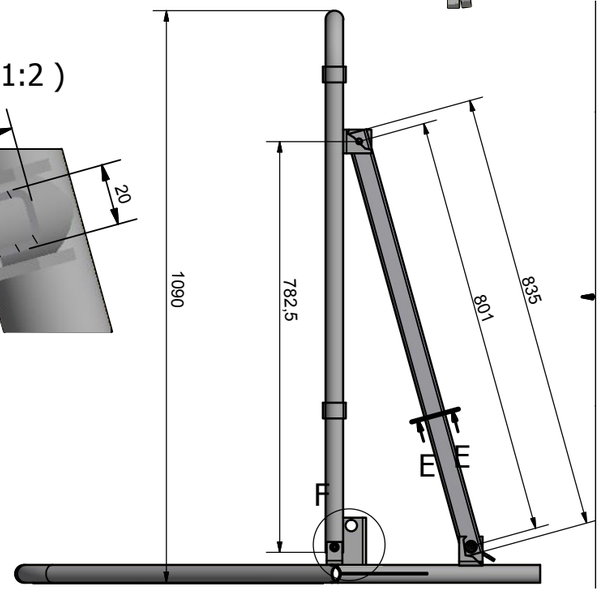

B (1 : 2)

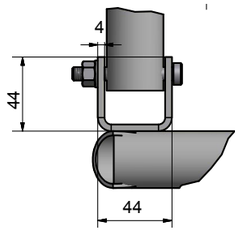

G-G (1 : 2)

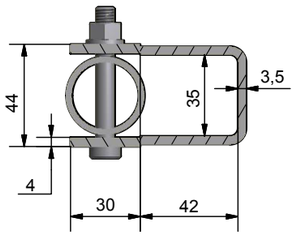

H-H (1:2)

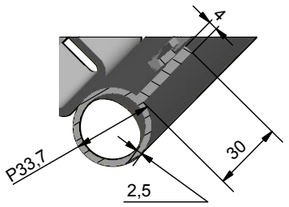

J-J (1:2)

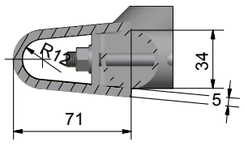

TITLE: **PG Klappbar**

	NAME	SIGN	DATE	WEIGHT: 48 kg
DRAWN			15/02/23	
CHK'D				

FINISH: HOT DIPPED GALVANISED

TOLERANCE: ±5%

tetris MODULBAU

CODE: 10023

Revision

SCALE: 1: 10

SHEET 1 OF 1

A3